2018 PJ2T Antenna Switching

(2015 Rebuild / “3 Matrix”)

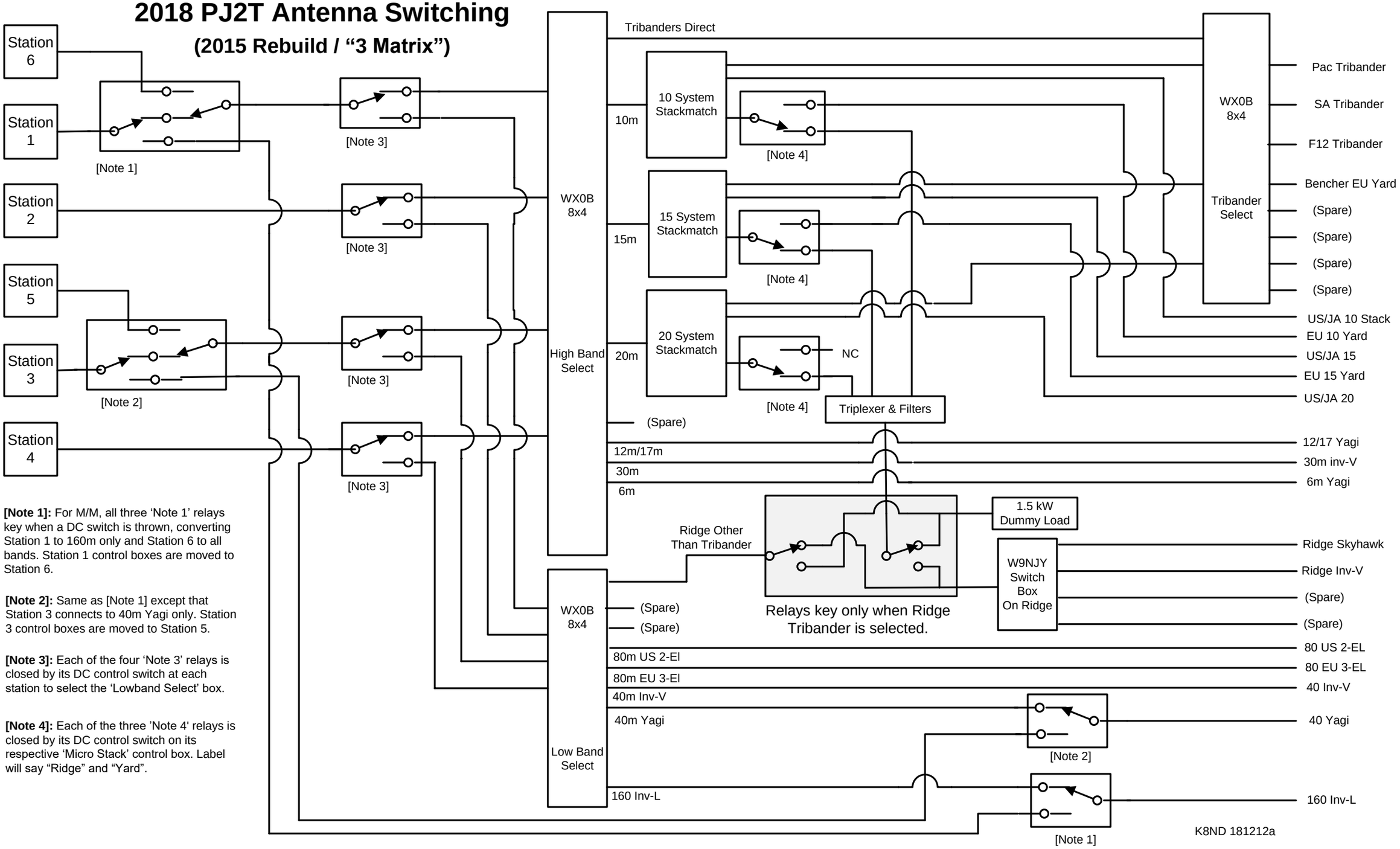

[Note 1]: For M/M, all three ‘Note 1’ relays key when a DC switch is thrown, converting Station 1 to 160m only and Station 6 to all bands. Station 1 control boxes are moved to Station 6.

[Note 2]: Same as [Note 1] except that Station 3 connects to 40m Yagi only. Station 3 control boxes are moved to Station 5.

[Note 3]: Each of the four ‘Note 3’ relays is closed by its DC control switch at each station to select the ‘Lowband Select’ box.

[Note 4]: Each of the three ’Note 4' relays is closed by its DC control switch on its respective ‘Micro Stack’ control box. Label will say “Ridge” and “Yard”.